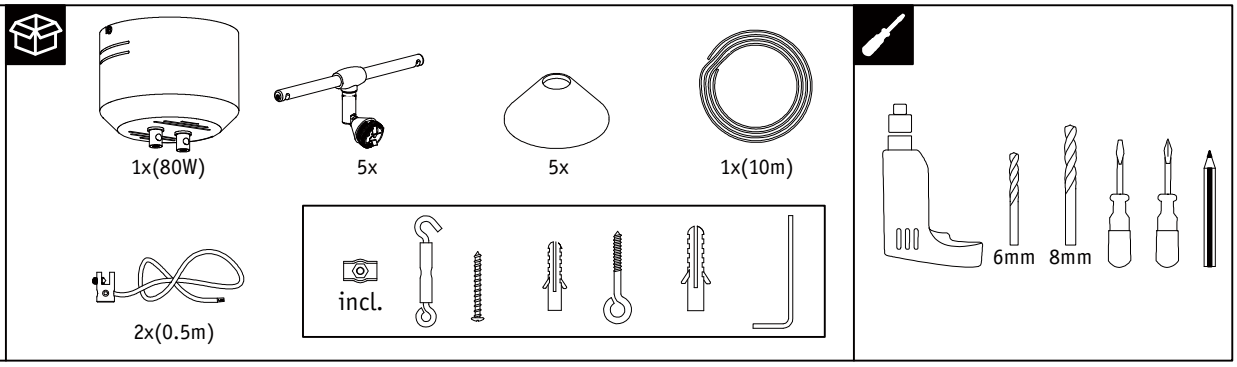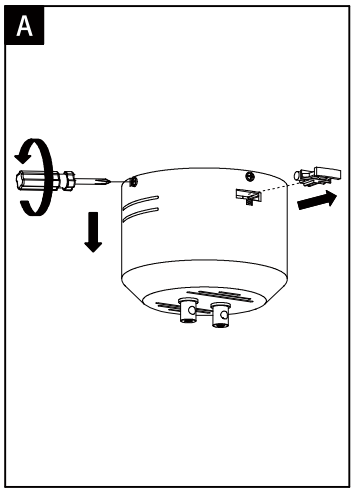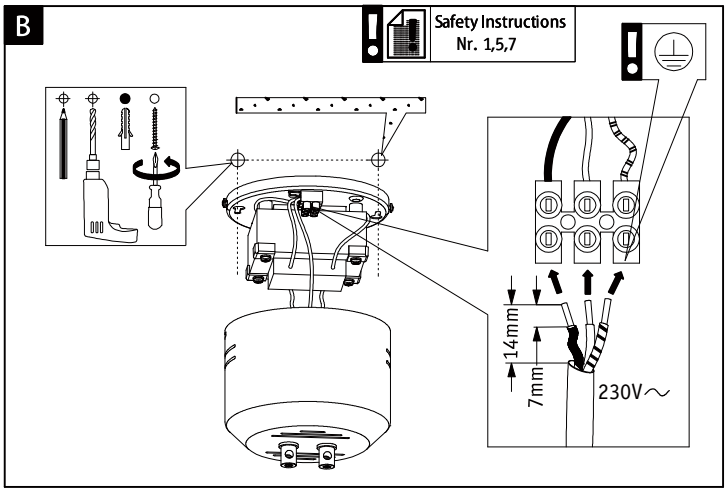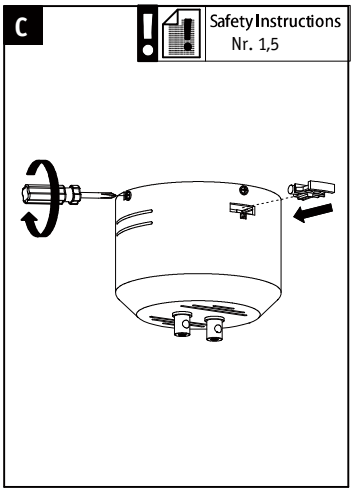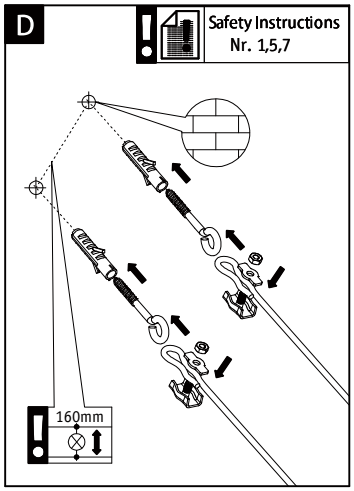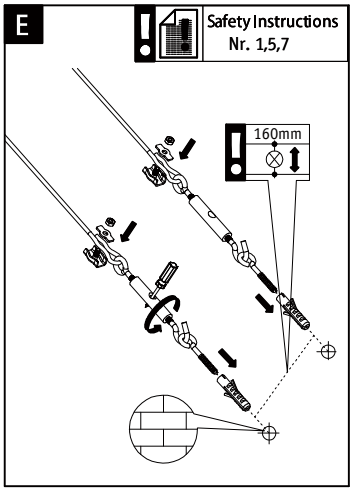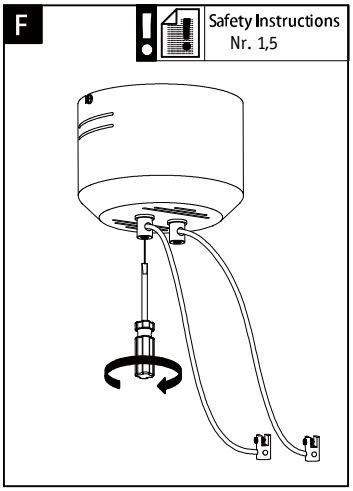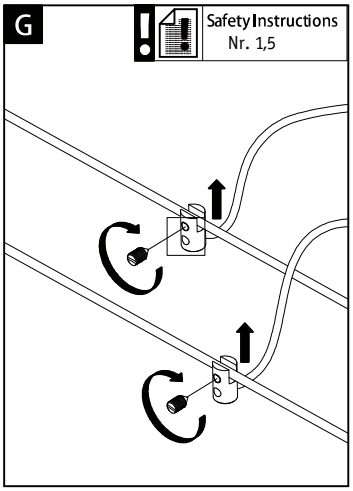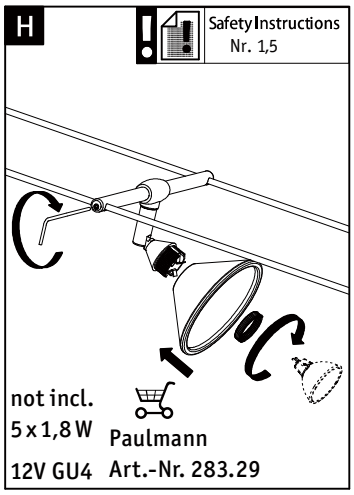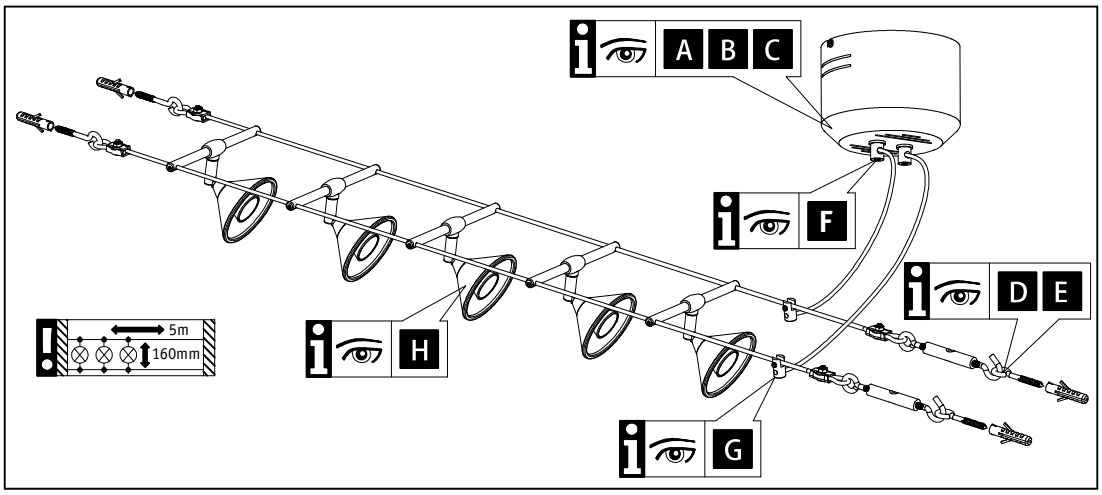Art.-Nr.: **941.43**
(+MA 326) PDG 05/16